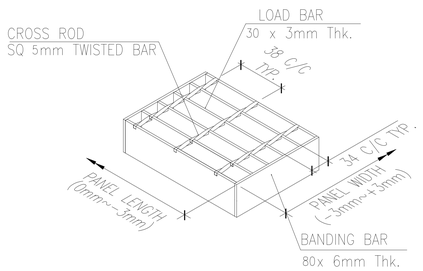

GRATING TYP :

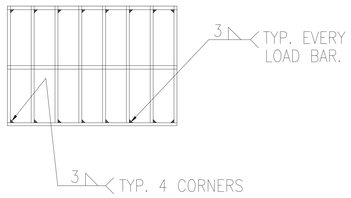

TYPICAL DETAIL - WELDING
ONE SIDE FULL WELD OF EVERY LOAD BAR

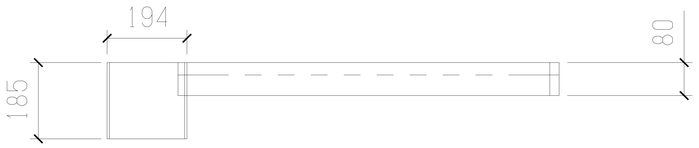

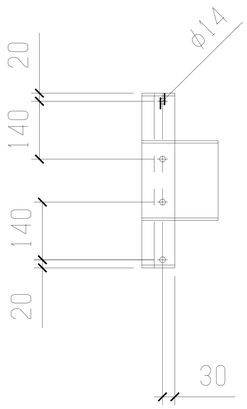

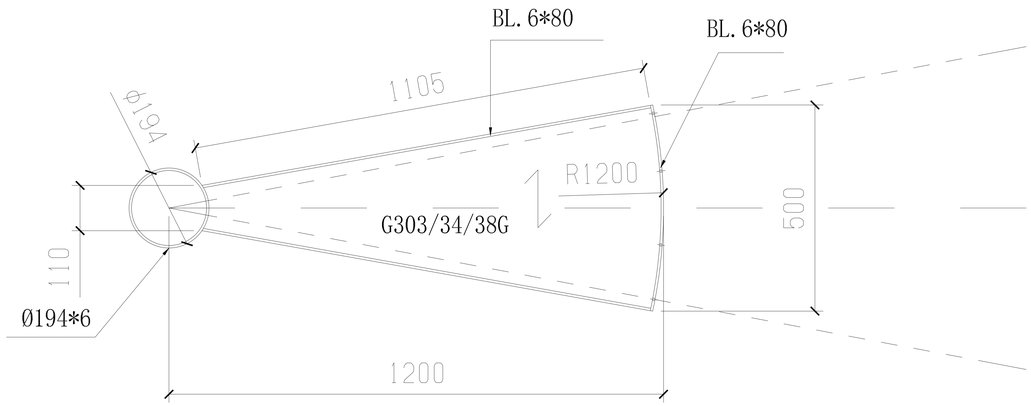

Technical Requirements:

1. As per Grating Standard
2. Grating Type: G303/34/38G;
3. Surface Treatment: HDG AS PER ISO 1461(average ≥75um);
4. ⟷ indicates the grating length（bearing bar direction ）.